# GL B1

CAME ÖZAK
TECHNICAL SPECIFICATIONS

## Dimensions (mm)

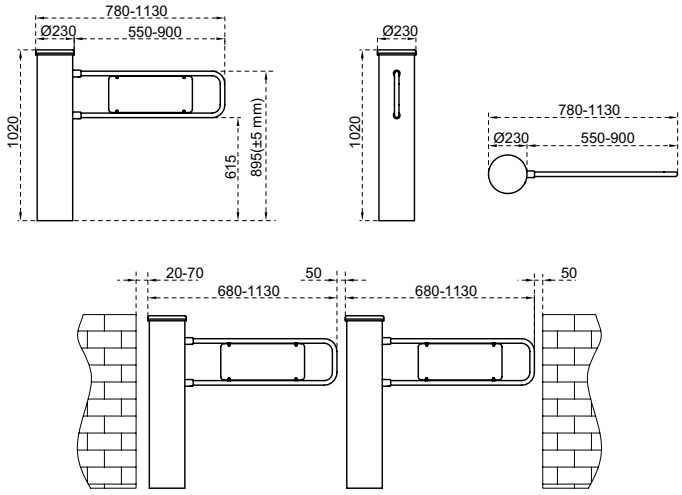


## Technical Features

| | |
|---|---|
| **Place of Use** | Indoors, outdoors |
| **Operating Temperature, Humidity** | -20°C/+68°C (opt. -50°C with heater positive), RH 95% non-condensing. |
| **Operating Intensity** | 100%, 7/24 use. |
| **Material Features** | **Body**: 304 grade (opt. 316 grade) satine brushed stainless steel.<br>**Top Lid**: 10 mm black tempered glass, choice of top lid hollowed for surface mounted access control device is also available.<br>**Wing**: Single piece special formed Ø27x2 mm, 304 grade (opt. 316 grade) satine brushed stainless steel frame infilled with acrylic panel wing with 550-900 mm wing width choices. |
| **Indicators** | **Direction and Passage Indicators :** RGB LED under top lid standard. |
| **Power** | **Operating Voltage** : 110/220V AC 50/60 Hz. (±10%), 24V DC.<br>**Consumption** : ~2 W at stand-by, max ~30 W (varies according to the options and accessories used). |
| **Operating Modes** | System operates bi-directionally (entry-exit).<br>Operation modes can be changed through dip switch, IOS and/or android app.<br>Entry - exit controlled<br>Entry - exit free (with optional photo-cell)<br>Entry controlled, exit free (with optional photocell)<br>Exit controlled, entry free (with optional photocell) |
| **Operating System** | Electromechanical motorized operation. |
| **Control System** | All functions, parameters and operating modes can be changed through the control board (microprocessor controlled), IOS and/or android app. Firmware can be updated.<br>All past function updates and changes are kept in the server and records can be traced.<br>All inputs are opto-coupler protected.<br>Controllable by dry contact (ground control).<br>Compatible with all kinds of access control device.<br>Optional RS232, RS485 or TCP/IP module is available.<br>GET IT ON Google Play<br>Download on the App Store |
| **Flow Rate** | Wing opening / closing time : 1,5 - 2,0 sec. |
| **Emergency Mode** | System provides a free passageway (entry-exit) by opening the wing in preferred direction configured by dip switch (fail safe). Works compatible with fire warning and similar systems. At the end of an emergency situation, system returns to its normal operating mode. |
| **Power-off Situation** | System provides a free passageway (entry-exit) by manually pushing the wing towards entry or exit directions (fail safe). |
| **Weight** | ~41 kg |
| **Optional Features and Accessories** | Wireless remote control (receiver-transmitter), manual control, counter (with/without reset), card reader mounting bracket, heater positive, bottom plate, battery back-up, 316 grade stainless steel, RS232-RS485-TCP/IP modules, different outer body materials (mirror black, bronze, etc), different top lid materials (stainless steel, natural granite, etc), photocell for free mode. |

TD-1302-0105(3) Y.T.04.05.2023

*Design and specifications are subject to change without notice.